1854530
X-Prestley Oval Table-JV

Parts and Hardware List

A.	Top Assembly	1 pc
B.	Bottom Assembly	1 pc
C.	Side Assemblies	2 pcs
D.	Stationary Frame	1 pc
E.	Glass Shelf	1 pc
F.	Confirmat Screws	4 pcs
G.	Connecting Bolts	4 pcs
H.	Eccentric Cams	4 pcs
I.	Plastic Caps	4 pcs
J.	Phillips Head Screwdriver	1 pc
K.	Flat Head Screwdriver	1 pc
L.	Allen Head Wrench	1 pc

* Please make sure you have all the parts and hardware indicated above before you begin assembly of this item.
* This item should be assembled on a soft surface to prevent scratching the finish during assembly.
* This item may require periodic tightening.

Hardware Illustrations

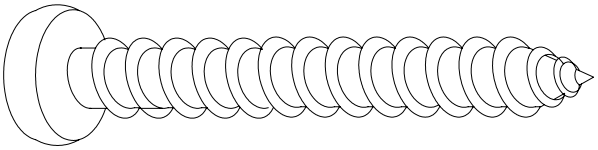

F. Confirmat Screw

G. Connecting Bolt

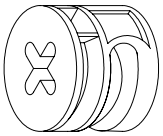

H. Eccentric Cam

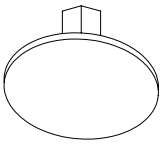

I. Plastic Cover

1854530
X-Prestley Oval Table-JV

Assembly Instructions

1. **Attach Stationary Frame (D)** Insert the dowels of Stationary Frame (D) into the pre-drilled holes in the Side Assemblies (C). Make sure the side for Glass Shelf (E) faces up. See Illustration #1.
2. **Attach Connecting Bolts (G)** Align the exposed threads on the Connecting Bolts (G) with the pre-threaded holes in Top Assembly (A).Tighten by turning in a clockwise direction using the Flat Head Screwdriver (K). See Illustration #2.
3. **Attach Top Assembly Assembly (A)** Align the Connecting Bolts (G) on the Top Assembly (A) with the holes in the top ends of Side Assemblies (C). Be sure the dowels in the top ends of Side Assemblies (C) are aligned with the pre-drilled holes in the Top Assembly (A). Insert the Eccentric Cams (H) into the pre-drilled holes in the Side Assemblies (C). Make sure the groove in the Eccentric Cams (H) faces out. Use the Phillips Head Screwdriver (J) to adjust Eccentric Cams (H) and to lock the inserted Connecting Bolts (G) by turning in a clockwise direction. Cover the Eccentic Cams (H) using Plastic Caps (I). See Illustration #2.
4. **Attach Bottom Assembly (B)** Align the pre-drilled holes in the bottom ends of Side Assemblies (C) with the pre-drilled holes in the Bottom Assembly (B). Make sure the dowels in the bottom ends of Side Assemblies (C) are aligned with the pre-drilled holes in the Bottom Assembly (B). Secure with Confirmat Screws (F) using Allen Head Wrench (L). See Illustration #2.

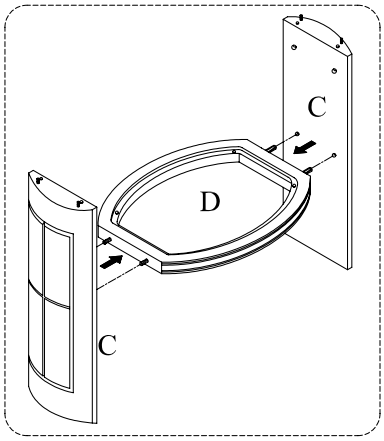

Illustration #1

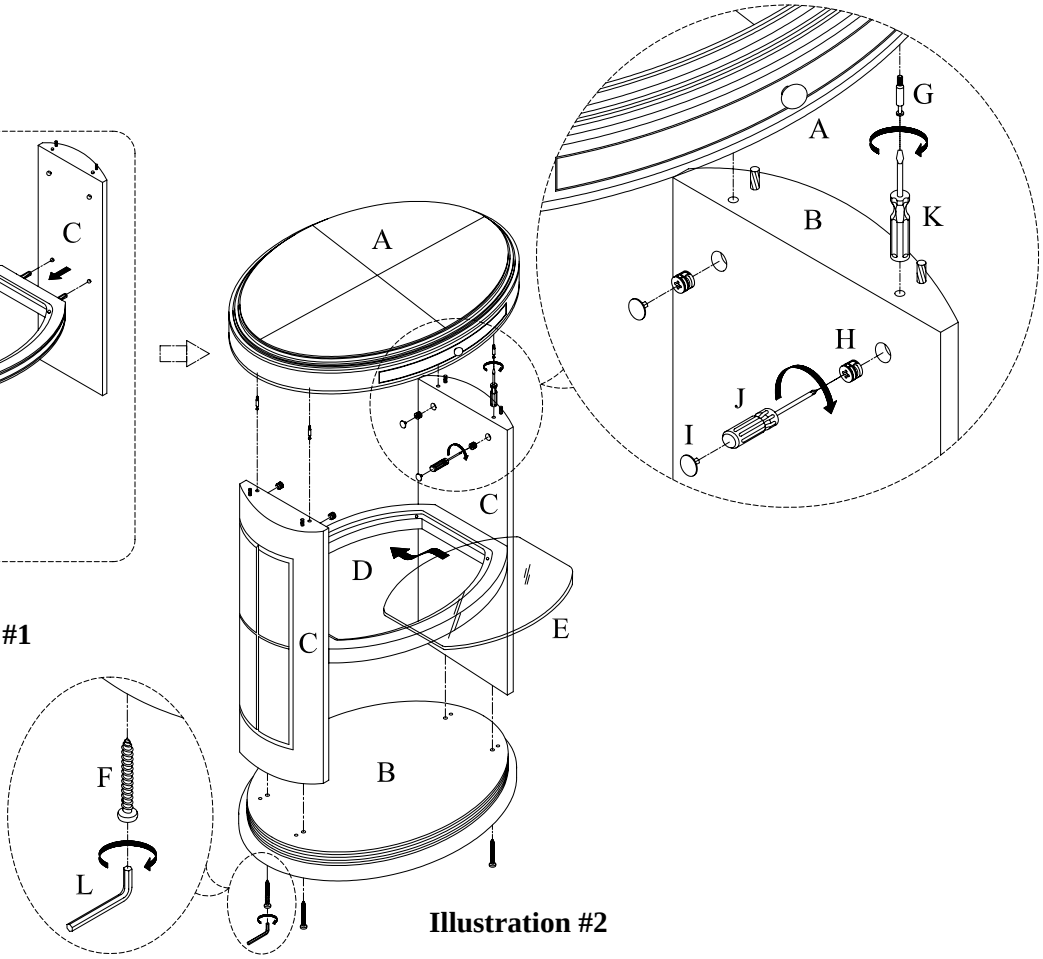

Illustration #2